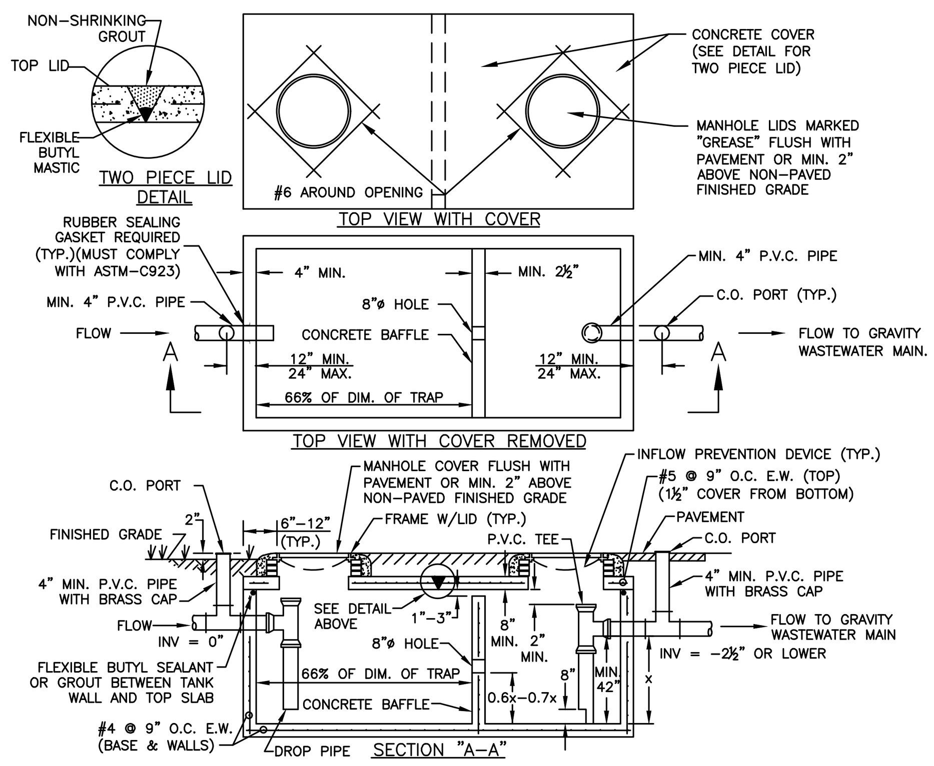

NOTES:

1. OIL/GREASE INTERCEPTORS SHALL BE WATERTIGHT AND SHALL BE BUILT OF PRECAST CONCRETE WHICH HAS A DESIGN COMPRESSIVE STRENGTH OF MINIMUM 3000 PSI AFTER 28 DAYS CURE. THE DESIGN, SIZING AND CONSTRUCTION MUST CONFORM TO THIS STANDARD AND TO ALL APPLICABLE BUILDING CODES, HEALTH DEPARTMENT REQUIREMENTS AND REGULATIONS, INCLUDING, BUT NOT LIMITED TO CHAPTER 64E-6, FLORIDA ADMINISTRATIVE CODE. WALL AND SLAB THICKNESS SHOWN ARE MINIMUMS, AND SHALL BE DETERMINED BY THE OWNER'S ENGINEER. THE CONCRETE BOX SHALL BE MONOLITHIC POURED AND SHALL HAVE A PRECAST HOLE ON EACH END ONLY FOR LATERAL. THE PRECAST HOLES SHALL HAVE CAST-IN BOOTS WHENEVER POSSIBLE. AN ALTERNATIVE TYPE OF INTERCEPTOR OTHER THAN A PRECAST CONCRETE STRUCTURE MAY BE INSTALLED ONLY WITH PRIOR DEPARTMENT APPROVAL. SHOP DRAWINGS ARE REQUIRED TO BE SUBMITTED AND APPROVED BY THE DEPARTMENT PRIOR TO THE PRE-CONSTRUCTION MEETING FOR ALL INTERCEPTORS.
2. THE OIL/GREASE INTERCEPTOR SHALL BE USED FOR APPLICATIONS EXCEEDING 25 GPM FLOW RATE, DETERMINED USING THE PLUMBING AND DRAINAGE INSTITUTE PDI G101 STANDARD. A DESIGN CALCULATION MUST BE SUBMITTED FOR APPROVAL WITH A SHOP DRAWING PRIOR TO THE PRE-CONSTRUCTION MEETING. FOR APPLICATIONS UP TO 25 GPM FLOW RATE (ONE MINUTE FLOW) OR 50 GPM (TWO MINUTE FLOW), AN APPROVED OUTDOOR "GREASE TRAP" MAY BE USED; OTHER DESIGNS MAY BE CONSIDERED UPON SUBMITTAL AND APPROVAL OF SHOP DRAWINGS.
3. INSPECTION PORTS (CLEAN OUTS) ARE REQUIRED TO BE INSTALLED AT EACH END OF ANY TYPE OF INTERCEPTOR WITH PORTS TO REMAIN EASILY ACCESSIBLE FOR UTILITY INSPECTION AND SAMPLING.
4. THE INTERCEPTOR AND CLEAN-OUTS PORT SHALL BE LOCATED OUTSIDE AND IN NON-TRAFFIC AREA WHENEVER POSSIBLE. IF INSTALLED IN IN A TRAFFIC AREA MINI-MANHOLES ARE REQUIRED ON THE INSPECTION PORTS (CLEAN OUTS). THE SURFACE SURROUNDING THE INTERCEPTOR SHALL BE SLOPED TO DRAIN STORM WATER AWAY FROM THE INTERCEPTOR.
5. THE CAPACITY DETERMINATION FOR THE INTERCEPTOR IS THE RESPONSIBILITY OF THE OWNER/CUSTOMER. THE MINIMUM VOLUME OF ANY GREASE INTERCEPTOR SHALL BE 750 GALLONS AND THE MAXIMUM VOLUME OF A SINGLE GREASE INTERCEPTOR SHALL BE 1250 GALLONS. WHEN THE REQUIRED EFFECTIVE CAPACITY OF THE GREASE INTERCEPTOR IS GREATER THAN 1250 GALLONS, INSTALLATION OF MULTIPLE GREASE INTERCEPTORS IN SERIES IS REQUIRED.
6. NO BAFFLE IS REQUIRED IF THERE ARE MULTIPLE GREASE INTERCEPTORS INSTALLED IN SERIES. HOWEVER, CLEANOUT PORTS MUST BE INSTALLED ON EACH END OF EACH INTERCEPTOR.
7. THE PROPERTY OWNER/CUSTOMER SHALL BE RESPONSIBLE FOR THE OPERATION AND MAINTENANCE OF THE INTERCEPTOR.
8. THE GREASE INTERCEPTOR SHALL NOT BE USED FOR THE PURPOSE OF INTERCEPTING SAND AND OIL FROM NON- FOOD HANDLING ESTABLISHMENTS.
9. EACH FACILITY WITH AN OIL/GREASE INTERCEPTOR SHALL HAVE A SEPARATE (NOT SHARED) INTERCEPTOR AND SHALL BE INDIVIDUALLY METERED THROUGH THE DEPARTMENT.
10. A "GREASE TRAP" OR "OIL/GREASE INTERCEPTOR" SHALL BE REQUIRED TO RECEIVE THE DRAINAGE FROM FIXTURES AND EQUIPMENT (SINKS, DISHWASHERS, FLOOR DRAINS, CAN WASH AREAS, ETC.) WITH GREASE LADEN WASTE LOCATED IN COMMERCIAL FOOD PREPARATION AREAS SUCH AS RESTAURANTS, HOTEL KITCHENS, HOSPITALS, SCHOOL KITCHENS, BARS, FACTORY CAFETERIAS, CLUBS, ETC.
11. THE "GREASE TRAP" OR "OIL/GREASE INTERCEPTOR" SHALL BE LOCATED AS CLOSE AS PRACTICALLY POSSIBLE TO THE FIXTURES AND EQUIPMENT GENERATING GREASE.
12. A "SOLIDS INTERCEPTOR" SHALL BE CONSIDERED TO BE INSTALLED UPSTREAM OF A " GREASE TRAP" WHERE SUBSTANTIAL AMOUNT OF SOLIDS FROM FOOD GRINDERS, DISPOSALS MAY BE PRESENT.
13. MANHOLE COVER SHALL BE MACHINED TO ACCEPT INFLOW PROTECTOR.

OIL/ GREASE INTERCEPTOR ✳ 1S

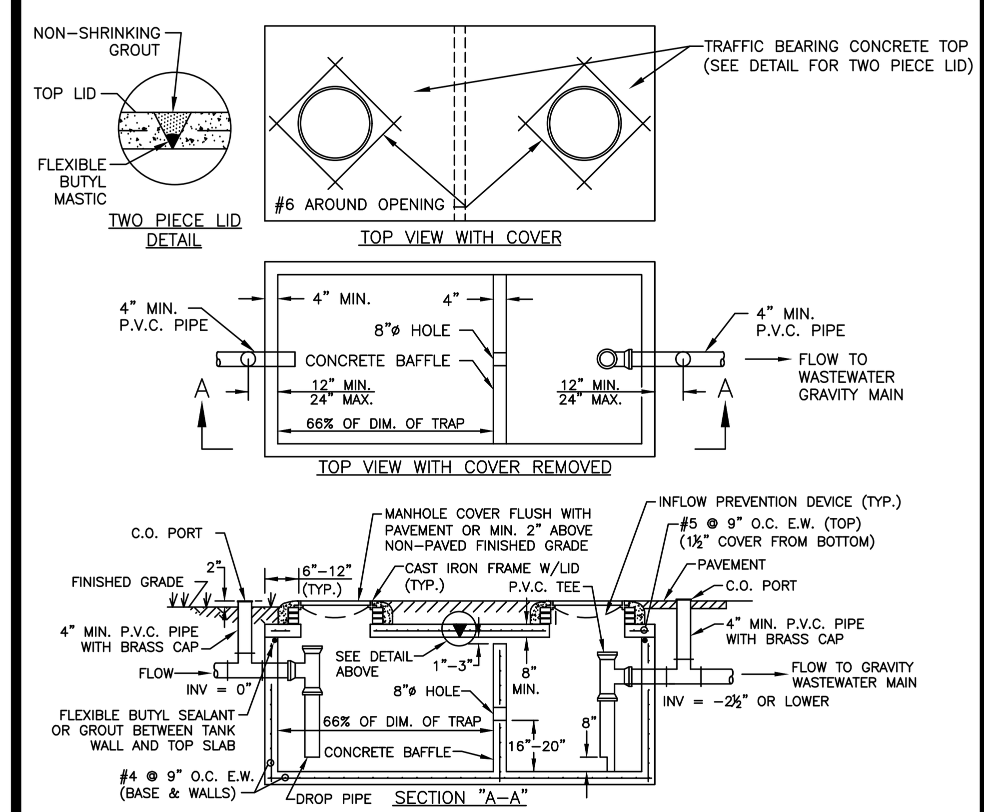

NOTES:

1. SAND/OIL INTERCEPTORS SHALL BE WATERTIGHT AND SHALL BE BUILT OF PRECAST CONCRETE WHICH HAS A DESIGN COMPRESSIVE STRENGTH OF MINIMUM 3000 PSI AFTER 28 DAYS CURE. THE DESIGN, SIZING AND CONSTRUCTION MUST CONFORM TO THIS STANDARD AND TO ALL APPLICABLE BUILDING CODES, HEALTH DEPARTMENT REQUIREMENTS AND REGULATIONS, INCLUDING, BUT NOT LIMITED TO CHAPTER 64E-6, FLORIDA ADMINISTRATIVE CODE. WALL AND SLAB THICKNESS SHOWN ARE MINIMUMS, AND SHALL BE DETERMINED BY THE OWNER'S ENGINEER. THE CONCRETE BOX SHALL BE MONOLITHIC POURED AND SHALL HAVE A PRECAST HOLE ON EACH END ONLY FOR LATERAL. THE PRECAST HOLES SHALL HAVE CAST-IN BOOTS WHENEVER POSSIBLE.
2. AN ALTERNATIVE TYPE OF INTERCEPTOR STRUCTURE MAY BE INSTALLED ONLY WITH PRIOR DEPARTMENT APPROVAL. SHOP DRAWINGS ARE REQUIRED TO BE SUBMITTED AND APPROVED BY THE DEPARTMENT PRIOR TO THE PRE-CONSTRUCTION MEETING FOR ALL INTERCEPTORS.
3. INSPECTION PORTS (CLEAN OUTS) ARE REQUIRED TO BE INSTALLED AT EACH END OF ANY TYPE OF INTERCEPTOR WITH PORTS TO REMAIN EASILY ACCESSIBLE FOR UTILITY INSPECTION AND SAMPLING.
4. THE INTERCEPTOR SHALL BE LOCATED IN GRASS AREA/NON-TRAFFIC AREA WHENEVER POSSIBLE. THE SURFACE SURROUNDING THE INTERCEPTOR SHALL BE SLOPED TO DRAIN STORM WATER AWAY FROM THE INTERCEPTOR.
5. THE CAPACITY DETERMINATION FOR THE INTERCEPTOR IS THE RESPONSIBILITY OF THE OWNER/CUSTOMER. THE MINIMUM VOLUME OF A SAND/OIL INTERCEPTOR SHALL BE 750 GALLONS. WHEN THE REQUIRED EFFECTIVE CAPACITY OF THE SAND/OIL INTERCEPTOR IS GREATER THAN 750 GALLONS, INSTALLATION OF SINGLE COMPARTMENT SAND/OIL INTERCEPTORS IN SERIES IS REQUIRED.
6. THE PROPERTY OWNER/CUSTOMER SHALL BE RESPONSIBLE FOR THE OPERATION AND MAINTENANCE OF THE INTERCEPTOR.
7. SAND/OIL INTERCEPTOR SHALL NOT BE USED FOR THE PURPOSE OF INTERCEPTION OF GREASE FROM FOOD HANDLING ESTABLISHMENTS.
8. EACH FACILITY REQUIRED TO HAVE A SAND/OIL INTERCEPTOR SHALL HAVE A SEPERATE INTERCEPTOR AND SHALL BE INDIVIDUALLY METERED THROUGH THE DEPARTMENT.
9. MANHOLE LIDS SHALL BE MACHINED TO ACCEPT INFLOW PREVENTER.

SAND/ OIL INTERCEPTOR ✳ 2S

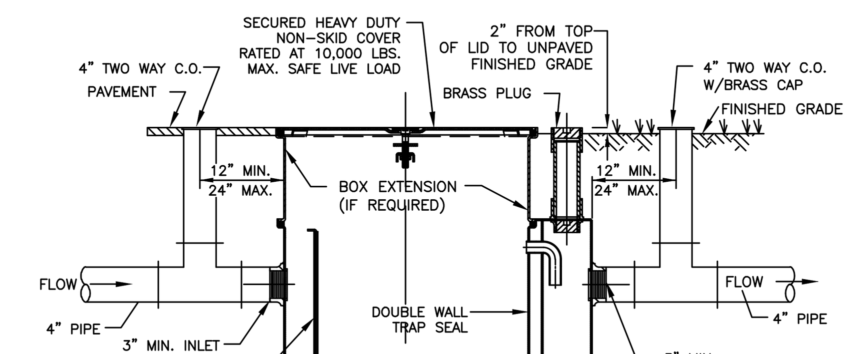

NOTES:

1. THE GREASE TRAP SHALL BE WATERTIGHT AND GAS TIGHT AND SHALL BE FABRICATED FROM STEEL, ACID RESISTANT COATED INTERIOR AND EXTERIOR.
2. THE GREASE TRAP SHALL BE CERTIFIED AND TAGGED BY THE SEAL OF THE PLUMBING AND DRAINAGE INSTITUTE (PDI), AND PDI RATED AT 50 GPM FLOW RATE AND 100 LBS. GREASE CAPACITY. THE GREASE TRAP SIZE, DESIGN AND INSTALLATION MUST COMPLY OR EXCEED THE APPLICABLE BUILDING CODES AND REGULATIONS.
3. THE GREASE TRAP MAY BE USED IF AN OIL/GREASE INTERCEPTOR IS NOT REQUIRED AND ONLY FOR APPLICATIONS UP TO 25 GPM FLOW RATE (ONE MINUTE FLOW) OR 50 GPM (TWO MINUTE FLOW), DETERMINED USING THE PDI G 101 STANDARD. FOR HIGHER FLOW RATES OR GREASE CAPACITY GREATER THAN 50 LBS., AN APPROVED "OIL/GREASE INTERCEPTOR" WILL BE REQUIRED. A DESIGN CALCULATION SHALL BE SUBMITTED FOR APPROVAL WITH A SHOP DRAWING PRIOR TO PRE-CONSTRUCTION MEETING. THE SHOP DRAWING SHALL BE SIGNED BY THE DESIGNING ENGINEER AND BY THE CONTRACTOR. THE PROJECT NAME WITH STREET ADDRESS OF THE FACILITY (IF AVAILABLE) SHALL BE SHOWN ON THE SHOP DRAWING. OTHER DESIGNS MAY BE USED UPON APPROVAL OF SHOP DRAWINGS.
4. THE GREASE TRAP SHALL BE LOCATED OUTDOORS, EASY ACCESSIBLE FOR MAINTENANCE AND SAMPLING, PREFERABLY IN GRASS AREA, NOT IN TRAFFIC AREA, PARKING SPACES OR SIDEWALKS. THE SURFACE SURROUNDING THE GREASE TRAP SHALL BE SLOPED TO DRAIN STORM WATER AWAY FROM THE GREASE TRAP.
5. THE GREASE TRAP SHALL NOT BE USED FOR THE PURPOSE OF INTERCEPTING SAND AND OIL FROM NON-FOOD HANDLING ESTABLISHMENTS.
6. THE PROPERTY OWNER/CUSTOMER SHALL BE RESPONSIBLE FOR THE OPERATION AND MAINTENANCE OF THE GREASE TRAP.
7. EACH FACILITY WITH A GREASE TRAP SHALL BE INDIVIDUALLY METERED THROUGH THE DEPARTMENT.
8. EACH FACILITY WHICH IS REQUIRED TO INSTALL A GREASE TRAP SHALL HAVE A SEPARATE (NOT SHARED) GREASE TRAP.
9. INSPECTION PORTS (CLEAN OUTS) ARE REQUIRED TO BE INSTALLED AT EACH END OF ANY TYPE OF INTERCEPTOR WITH PORTS TO REMAIN EASILY ACCESSIBLE FOR UTILITY INSPECTION AND SAMPLING.
10. A "GREASE TRAP" OR "OIL/GREASE INTERCEPTOR" SHALL BE REQUIRED TO RECEIVE THE DRAINAGE FROM FIXTURES AND EQUIPMENT (SINKS, DISHWASHERS, FLOOR DRAINS, CAN WASH AREAS, ETC.) WITH GREASE LADDEN WASTE LOCATED IN COMMERCIAL FOOD PREPARATION AREAS SUCH AS RESTAURANTS, HOTEL KITCHENS, HOSPITALS, SCHOOL KITCHENS, BARS, FACTORY CAFETERIAS, CLUBS, ETC.
11. THE "GREASE TRAP" OR "OIL/GREASE INTERCEPTOR" SHALL BE LOCATED AS CLOSE PRACTICALLY POSSIBLE TO THE FIXTURES AND EQUIPMENT GENERATING GREASE.
12. GREASE TRAPS SHALL BE EQUIPPED WITH DEVICES TO CONTROL THE RATE OF FLOW, SO THE RATE OF THE FLOW DO NOT EXCEED 25 GPM. THE FLOW CONTROL DEVICE SHALL BE INSTALLED IN ACCORDANCE WITH THE CODE AND MANUFACTURER'S INSTRUCTIONS.
13. A "SOLIDS INTERCEPTOR" SHALL BE CONSIDERED TO BE INSTALLED UPSTREAM OF A " GREASE TRAP" WHERE SUBSTANTIAL AMOUNT OF SOLIDS FROM FOOD GRINDERS, DISPOSALS MAY BE PRESENT.

GREASE TRAP ✳ 3S

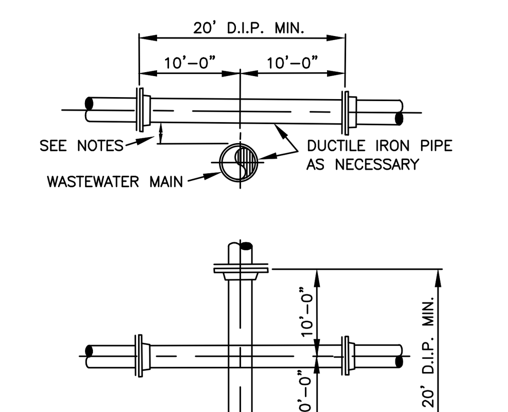

NOTES:

1. STORM SEWER, GRAVITY WASTEWATER AND RECLAIMED WATER MAIN CROSSING UNDER POTABLE WATER MAINS SHALL BE LAID TO PROVIDE A MINIMUM VERTICAL DISTANCE OF TWELVE (12) INCHES BETWEEN THE INVERT OF THE UPPER PIPE AND THE CROWN OF THE LOWER PIPE. WHERE THIS MINIMUM SEPARATION CANNOT BE MAINTAINED, THE CROSSING SHALL BE ARRANGED SO THAT THE STORM/WASTEWATER/RECLAIMED WATER PIPE JOINTS AND POTABLE WATER MAIN JOINTS ARE EQUIDISTANT FROM THE POINT OF CROSSING WITH NO LESS THAN TEN (10) FEET BETWEEN ANY TWO JOINTS, BOTH PIPES SHALL BE D.I.P., AND THE MINIMUM VERTICAL SEPARATION SHALL BE 6 INCHES. WHERE THERE IS NO ALTERNATIVE TO STORM/WASTEWATER/RECLAIMED WATER PIPES CROSSING OVER A POTABLE WATER MAIN, THE CRITERIA FOR MINIMUM 12" VERTICAL SEPARATION BETWEEN LINES AND JOINT ARRANGEMENT, AS STATED ABOVE, SHALL BE REQUIRED, AND BOTH PIPES SHALL BE D.I.P. IRRESPECTIVE OF SEPARATION. D.I.P. IS NOT REQUIRED FOR STORM SEWERS.
2. WHENEVER POSSIBLE MAINTAIN MIN. TEN (10) FEET HORIZONTAL DISTANCE (WALL TO WALL) BETWEEN POTABLE WATER MAIN AND STORM SEWER, WASTEWATER MAIN, OR FORCE MAIN (A MIN. 6' SEPARATION MAY BE APPROVED ON A CASE BY CASE BASIS). MAINTAIN MIN. THREE (3) FEET HORIZONTAL DISTANCE (WALL TO WALL) BETWEEN RECLAIMED WATER MAIN AND POTABLE WATER MAIN, STORM SEWER, WASTEWATER GRAVITY MAIN OR FORCE MAIN.
3. FORCE MAIN CROSSING POTABLE WATER MAIN OR RECLAIMED WATER MAIN SHALL BE LAID TO PROVIDE A MINIMUM VERTICAL DISTANCE OF TWELVE (12) INCHES BETWEEN THE OUTSIDE OF THE FORCE MAIN AND OUTSIDE OF THE POTABLE WATER MAIN OR RECLAIMED WATER MAIN WITH THE POTABLE WATER MAIN OR RECLAIMED WATER MAIN CROSSING OVER THE FORCE MAIN.
4. WASTEWATER LATERALS SHALL CROSS UNDER POTABLE WATER MAINS WITH A MIN. 12" VERTICAL SEPARATION WHENEVER POSSIBLE. WHERE THIS MINIMUM SEPARATION CANNOT BE MAINTAINED, A 20' SECTION OF DUCTILE IRON PIPE POTABLE WATER MAIN CENTERED ON THE CROSSING IS REQUIRED AND THE MINIMUM VERTICAL SEPARATION SHALL BE 6". WHERE THERE IS NO ALTERNATIVE TO A WASTEWATER LATERAL PIPE CROSSING OVER A POTABLE WATER MAIN, A MINIMUM 12" VERTICAL SEPARATION IS REQUIRED, THE LATERAL SHALL BE P.V.C. C-900 SDR18 OR BETTER, THE POTABLE WATER MAIN SHALL BE D.I.P. AND THE PIPE JOINTS SHALL BE EQUIDISTANT FROM THE POINT OF CROSSING.
5. POTABLE WATER SERVICE LINES SHALL CROSS OVER WASTEWATER MAINS WITH MIN. 12" VERTICAL SEPARATION. WHERE THIS MIN. SEPARATION CAN NOT BE MAINTAINED, THE WATER SERVICE SHALL BE ENCASED IN A MIN. 10' LONG CASING CENTERED OVER THE CROSSING WITH MIN. 6" VERTICAL SEPARATION.
6. WASTEWATER MAINS, WATER MAINS, STORM PIPES AND OTHER UTILITY PIPES SHALL CROSS PERPENDICULAR WHENEVER POSSIBLE.

POTABLE WATER MAN, WASTEWATER MAIN, AND STORM SEWER CONFLICT 4S

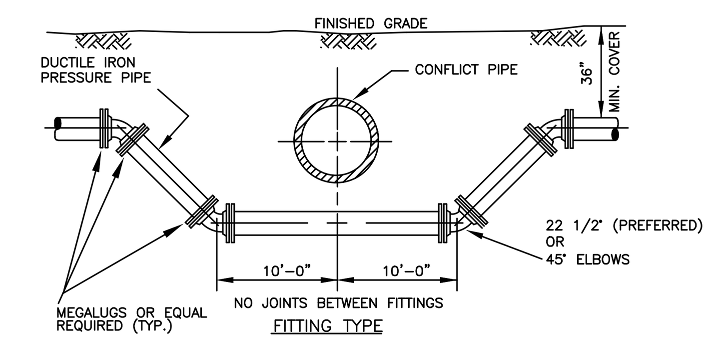

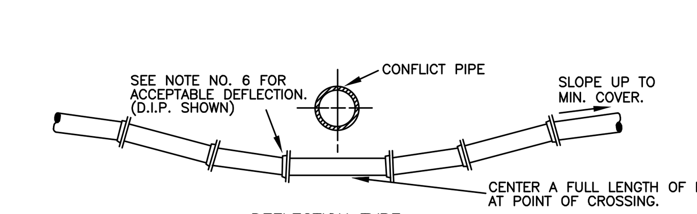

NOTES:

1. STORM SEWER, GRAVITY WASTEWATER AND RECLAIMED WATER MAIN CROSSING UNDER POTABLE WATER MAINS SHALL BE LAID TO PROVIDE A MINIMUM VERTICAL DISTANCE OF TWELVE (12) INCHES BETWEEN THE INVERT OF THE UPPER PIPE AND THE CROWN OF THE LOWER PIPE. WHERE THIS MINIMUM SEPARATION CANNOT BE MAINTAINED, THE CROSSING SHALL BE ARRANGED SO THAT THE STORM/WASTEWATER/RECLAIMED WATER PIPE JOINTS AND POTABLE WATER MAIN JOINTS ARE EQUIDISTANT FROM THE POINT OF CROSSING WITH NO LESS THAN TEN (10) FEET BETWEEN ANY TWO JOINTS, BOTH PIPES SHALL BE D.I.P., AND THE MINIMUM VERTICAL SEPARATION SHALL BE 6 INCHES. WHERE THERE IS NO ALTERNATIVE TO STORM/WASTEWATER/RECLAIMED WATER PIPES CROSSING OVER A POTABLE WATER MAIN, THE CRITERIA FOR MINIMUM 12" VERTICAL SEPARATION BETWEEN LINES AND JOINT ARRANGEMENT, AS STATED ABOVE, SHALL BE REQUIRED, AND BOTH PIPES SHALL BE D.I.P. IRRESPECTIVE OF SEPARATION. D.I.P. IS NOT REQUIRED FOR STORM SEWERS.
2. WHENEVER POSSIBLE MAINTAIN MIN. TEN (10) FEET HORIZONTAL DISTANCE (WALL TO WALL) BETWEEN POTABLE WATER MAIN AND STORM SEWER, WASTEWATER MAIN, OR FORCE MAIN (A MIN. 6' SEPARATION MAY BE APPROVED ON A CASE BY CASE BASIS.) MAINTAIN MIN. THREE (3) FEET HORIZONTAL DISTANCE (WALL TO WALL) BETWEEN RECLAIMED WATER MAIN AND POTABLE WATER MAIN, STORM SEWER, WASTEWATER GRAVITY MAIN OR FORCE MAIN.
3. FORCE MAIN CROSSING POTABLE WATER MAIN OR RECLAIMED WATER MAIN SHALL BE LAID TO PROVIDE A MINIMUM VERTICAL DISTANCE OF TWELVE (12) INCHES BETWEEN THE OUTSIDE OF THE FORCE MAIN AND OUTSIDE OF THE POTABLE WATER MAIN OR RECLAIMED WATER MAIN WITH THE POTABLE WATER MAIN OR RECLAIMED WATER MAIN CROSSING OVER THE FORCE MAIN.
4. FITTINGS SHALL BE RESTRAINED.
5. THE DEFLECTION TYPE CROSSING IS PREFERRED.
6. DO NOT EXCEED 75% OF MANUFACTURERS RECOMMENDED MAXIMUM JOINT DEFLECTION FOR DUCTILE IRON PIPE. PVC PIPE CURVATURE MAY ONLY BE ACCOMPLISHED BY INSTALLING APPROPRIATE BENDS.
7. ALL EXPOSED TIE STEEL SHALL BE COATED WITH COAL-TAR EPOXY.
8. POTABLE WATER SERVICE LINES SHALL CROSS OVER WASTEWATER MAINS WITH MIN. 12" VERTICAL SEPARATION. WHERE THIS MIN. SEPARATION CAN NOT BE MAINTAINED, THE WATER SERVICE SHALL BE ENCASED IN A MIN. 10' LONG CASING CENTERED OVER THE CROSSING WITH MIN. 6" VERTICAL SEPARATION.
9. WASTEWATER MAINS, WATER MAINS, STORM PIPES AND OTHER UTILITY PIPES SHALL CROSS PERPENDICULAR WHENEVER POSSIBLE.

POTABLE WATER MAIN/FORCE MAIN PRESSURE PIPE CONFLICT 5S

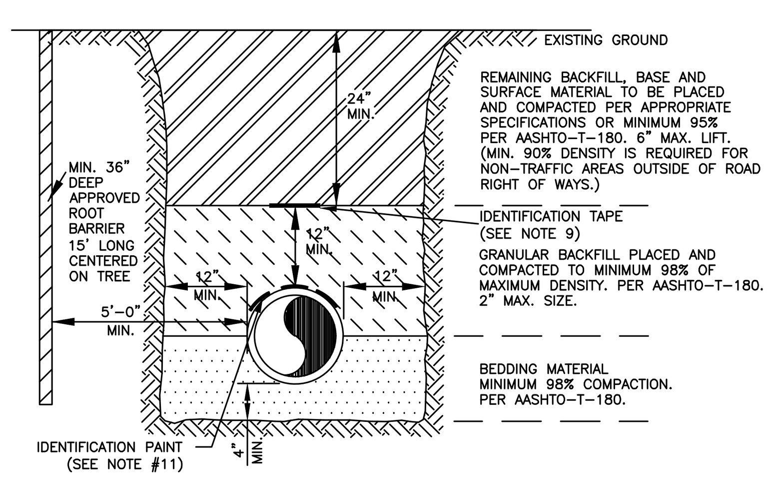

NOTES:

1. BEDDING SHALL CONSIST OF IN-SITU GRANULAR MATERIAL OR WASHED AND GRADED LIMEROCK 3/8"- 7/8" SIZING. UNSUITABLE IN-SITU MATERIALS SUCH AS MUCK, DEBRIS AND LARGER ROCKS SHALL BE REMOVED.
2. THE PIPE SHALL BE FULLY SUPPORTED FOR ITS ENTIRE LENGTH WITH APPROPRIATE COMPACTION UNDER THE PIPE HAUNCHES.
3. THE PIPE SHALL BE PLACED IN A DRY TRENCH.
4. BACKFILL SHALL BE FREE OF UNSUITABLE MATERIAL SUCH AS LARGE ROCK, MUCK AND DEBRIS.
5. DENSITY TESTS ARE REQUIRED IN 1 FOOT LIFTS ABOVE THE PIPE AT INTERVALS OF 400' MAXIMUM, MINIMUM 1 SET OF TESTS FOR EACH WASTEWATER GRAVITY MAIN RUN, OR AS DIRECTED BY THE INSPECTOR.
6. THE DEVELOPER/CONTRACTOR SHALL BE RESPONSIBLE TO COMPLY WITH ALL TRENCH SAFETY LAWS AND REGULATIONS.
7. SEE SEPARATE DETAILS FOR "PIPE INSTALLATION UNDER EXISTING PAVEMENT – OPEN CUT."
8. THE AFFECTED AREA SHALL BE RESTORED TO EQUAL OR BETTER CONDITION OR AS SPECIFIED IN PERMIT/CONTRACT DOCUMENTS.
9. APPROVED MAGNETIC TAPE IS REQUIRED FOR: ALL POTABLE WATER MAINS, FORCE MAINS AND RECLAIMED WATER MAINS. THE TAPE SHALL BE INSTALLED MAX. 24" BELOW FINISHED GRADE.
10. ROOT BARRIER IS REQUIRED FOR APPROVED TREE INSTALLATION CLOSER THAN 10 FEET FROM UTILITY FACILITIES.
11. CONTINUOUS 4" WIDE PAINT STRIPING IS REQUIRED FOR DIP/PCCP WATER MAINS (BLUE), DIP SEWER MAINS (GREEN), AND DIP RECLAIMED WATER MAINS (PURPLE).
12. PERMANENT ABOVE GROUND UTILITY MARKER SHALL BE INSTALLED IF REQUIRED BY PROPERTY OWNER GRANTING THE PIPE INSTALLATION PERMIT.
13. FOR PIPE INSTALLATIONS IN ROAD RIGHTS-OF-WAY, ROAD OWNER'S PERMIT SPECIFICATIONS SHALL APPLY.

TYPICAL TRENCH DETAIL ROOT BARRIER INSTALLATION 8S

CONSTRUCTION PROCEDURES

THE BACKFILL FOR THE FIRST AND SECOND STAGES SHALL BE PLACED IN 6" LIFTS (COMPACTED THICKNESS) AND SHALL BE COMPACTED TO 100% OF MAXIMUM DENSITY AS DETERMINED BY AASHTO T-99.

STAGE 1:

THE CONTRACTOR SHALL PROVIDE ADEQUATE COMPACTED FILL BENEATH THE HAUNCHES OF THE PIPE, USING MECHANICAL TAMPS SUITABLE FOR THIS PURPOSE. THIS COMPACTION APPLIES TO THE MATERIAL PLACED BENEATH THE HAUNCHES OF THE PIPE AND ABOVE ANY BEDDING REQUIRED.

STAGE 2:

THE CONTRACTOR SHALL OBTAIN A WELL-COMPACTED BED AND FILL ALONG THE SIDES OF THE PIPE AND TO A POINT INDICATING THE TOP OF SUB-GRADE MATERIAL.

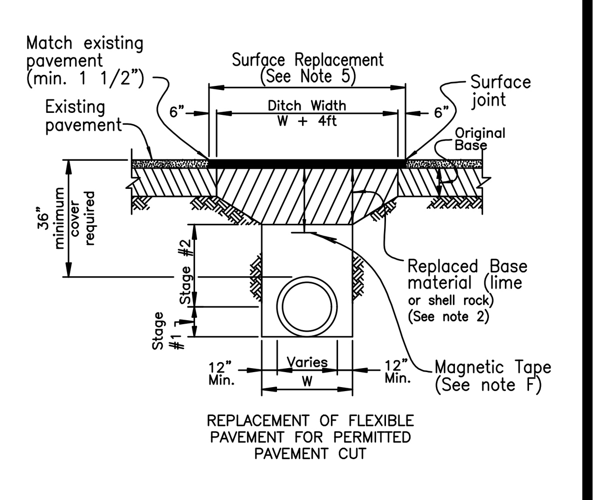

REPLACEMENT OF FLEXIBLE PAVEMENT FOR PERMITTED PAVEMENT CUT

CONSTRUCTION NOTES

1) BEDDING SHALL CONSIST OF IN-SITU GRANULAR MATERIAL OR WASHED AND GRADED LIMEROCK 3/8" – 7/8" SIZING WITH EQUAL OR GREATER STRUCTURAL ADEQUACY AS EXISTING. UNSUITABLE IN-SITU MATERIALS SUCH AS MUCK, DEBRIS AND LARGER ROCKS SHALL BE REMOVED.
2) REPLACED BASE MATERIAL (PER LAND DEVELOPMENT DESIGN STANDARDS) OVER DITCH SHALL BE TWICE THE THICKNESS OF THE ORIGINAL BASE OR 12" MINIMUM, WHICHEVER IS GREATER.
3) ASPHALT CONCRETE PAVEMENT JOINTS SHALL BE MECHANICALLY SAWED AND BUTT-JOINTED.
4) BASE MATERIAL SHALL BE PLACED IN TWO OR THREE LAYERS (6" MAX. PER LAYER) AND EACH LAYER THOROUGHLY ROLLED OR TAMPED TO THE SPECIFIED DENSITY.
5) SURFACE MATERIAL WILL BE CONSISTENT WITH THE EXISTING SURFACE OR 1 1/2" SI ASPHALTIC CONCRETE WITH RC-70 PRIME COAT AT 0.10 GAL/SQ. YD.
6) PIPE SHALL BE PLACED IN A DRY TRENCH.

GENERAL NOTES

A) ALL ROADWAY REPAIR WORK SHALL BE PERFORMED IN CONFORMANCE WITH APPLICABLE FDOT STANDARD SPECIFICATIONS FOR ROAD AND BRIDGE CONSTRUCTION AND COUNTY PPM# EL-0-3606.
B) DENSITY TESTS SHALL BE TAKEN IN 1 FT LIFTS ABOVE THE PIPE AT INTERVALS OF 400 FT MAXIMUM (1 SET MINIMUM) OR AS DIRECTED BY THE CONSTRUCTION COORDINATION DIVISION. RESULTS SHALL BE SUBMITTED TO CONSTRUCTION COORDINATION DIVISION AS PART OF THEIR FIELD REVIEW.
C) ENGINEER-OF-RECORD SHALL PROVIDE FULL-TIME INSPECTION DURING THE ENTIRETY OF THE OPEN-CUT OPERATION, BEGINNING WITH THE EXCAVATION AND CONTINUING THROUGH THE COMPLETION OF THE PAVING.
D) IF THE PAVEMENT IS NOT COMPLETELY RESTORED IMMEDIATELY FOLLOWING THE OPEN CUT, A SMOOTH TEMPORARY PATCH (MINIMUM 1.25" ASPHALT) SHALL BE INSTALLED, PROPERLY MATCHING THE EXISTING GRADING OF THE ROADWAY. THE TEMPORARY PATCH SHALL BE ALLOWED TO REMAIN IN PLACE AND BE MAINTAINED FOR A PERIOD NO LONGER THAN 45 DAYS. THE COUNTY RETAINS THE RIGHT TO USE POSTED SURETY TO COMPLETE ANY RESTORATION WORK THAT HAS NOT BEEN COMPLETED IN THE 45 DAYS PERIOD. ALTERNATIVE TEMPORARY TRENCH PROTECTION (STEEL PLATES OR OTHERS) MAY BE APPROVED BY THE CONSTRUCTION COORDINATION DIVISION.
E) FOR THE FINAL RESTORATION, THE ROAD SHALL BE MILLED AND RESURFACED WITH 1-1/2" (ONE AND A HALF INCH) OF SIII OR SI ASPHALT SURFACE COURSE FOR A FULL LANE WIDTH ENCROACHED BY THE TRENCH.
F) APPROVED MAGNETIC TAPE IS REQUIRED FOR ALL MAIN PRESSURE PIPES AND CONDUIT IN THE COUNTY'S RIGHT-OF-WAY. INSTALL TAPE 24" BELOW FINISHED GRADE.
G) CONTINUOUS 4" WIDE PAINT STRIPING IS REQUIRED FOR DIP/PCCP WATER MAINS (BLUE), DIP SANITARY MAINS (GREEN), DIP RECLAIMED WATER MAINS (PURPLE), GAS MAINS (YELLOW), OR AS REQUIRED BY THE APWA.

OPEN CUT PIPE INSTALLATION NON-THOROUGHFARE ROAD 6S

CONSTRUCTION PROCEDURES

THE BACKFILL FOR THE FIRST AND SECOND STAGES SHALL BE PLACED IN 6" LIFTS (COMPACTED THICKNESS) AND SHALL BE COMPACTED TO 100% OF MAXIMUM DENSITY AS DETERMINED BY AASHTO T-99.

STAGE 1:

THE CONTRACTOR SHALL PROVIDE ADEQUATE COMPACTED FILL BENEATH THE HAUNCHES OF THE PIPE, USING MECHANICAL TAMPS SUITABLE FOR THIS PURPOSE. THIS COMPACTION APPLIES TO THE MATERIAL PLACED BENEATH THE HAUNCHES OF THE PIPE AND ABOVE ANY BEDDING REQUIRED.

STAGE 2:

THE CONTRACTOR SHALL OBTAIN A WELL-COMPACTED BED AND FILL ALONG THE SIDES OF THE PIPE AND TO A POINT INDICATING THE TOP OF SUB-GRADE MATERIAL.

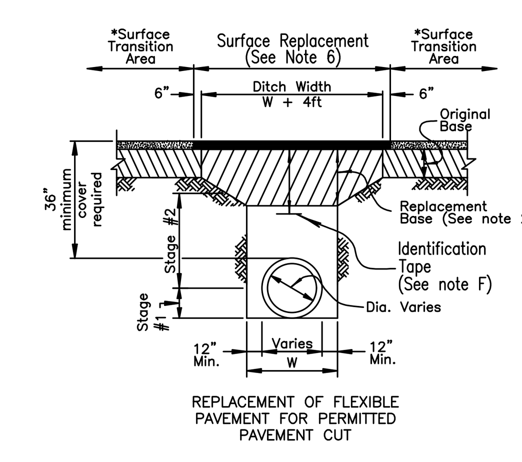

REPLACEMENT OF FLEXIBLE PAVEMENT FOR PERMITTED PAVEMENT CUT

CONSTRUCTION NOTES

1) BEDDING SHALL CONSIST OF IN-SITU GRANULAR MATERIAL OR WASHED AND GRADED LIMEROCK 3/8" – 7/8" SIZING WITH EQUAL OR GREATER STRUCTURAL ADEQUACY AS EXISTING. UNSUITABLE IN-SITU MATERIALS SUCH AS MUCK, DEBRIS AND LARGER ROCKS SHALL BE REMOVED.
2) REPLACED BASE MATERIAL OVER DITCH SHALL BE 16" MINIMUM FOR THOROUGHFARE PLAN ROADS.
3) ASPHALT CONCRETE PAVEMENT JOINTS SHALL BE MECHANICALLY SAWED AND BUTT-JOINTED.
4) BASE MATERIAL (PER ROADWAY PRODUCTION DESIGN STANDARDS) SHALL BE PLACED IN TWO OR THREE LAYERS (6" MAX. PER LAYER) AND EACH LAYER THOROUGHLY ROLLED OR TAMPED TO THE SPECIFIED DENSITY.
5) * SURFACE TRANSITION AREA (SEE PLANS FOR LOCATION). OVERLAY OR MILL/RESURFACE FOR A DISTANCE OF 50'ON BOTH SIDES OF THE OPEN CUT AND FOR A FULL LANE WIDTH.
6) 1" SIII ASPHALTIC CONCRETE OVER 1 1/2" SI ASPHALTIC CONCRETE WITH RC-70 PRIME COAT AT 0.10 GAL/SQ. YD.
7) PIPE SHALL BE PLACED IN A DRY TRENCH.

GENERAL NOTES

A) ALL ROADWAY REPAIR WORK SHALL BE PERFORMED IN CONFORMANCE WITH APPLICABLE FDOT STANDARD SPECIFICATIONS FOR ROAD AND BRIDGE CONSTRUCTION AND COUNTY PPM# EL-0-3605.
B) DENSITY TESTS SHALL BE TAKEN IN 1 FT LIFTS ABOVE THE PIPE AT INTERVALS OF 400 FT MAXIMUM (1 SET MINIMUM) OR AS DIRECTED BY THE CONSTRUCTION COORDINATION DIVISION. RESULTS SHALL BE SUBMITTED TO CONSTRUCTION COORDINATION DIVISION AS PART OF THEIR FIELD REVIEW.
C) ENGINEER-OF-RECORD WILL PROVIDE FULL-TIME INSPECTION DURING THE ENTIRETY OF THE OPEN-CUT OPERATION, BEGINNING WITH THE EXCAVATION AND CONTINUING THROUGH THE COMPLETION OF THE PAVING.
D) IF THE PAVEMENT IS NOT COMPLETELY RESTORED IMMEDIATELY FOLLOWING THE OPEN CUT, A SMOOTH TEMPORARY PATCH (MINIMUM 1.25" ASPHALT) SHALL BE INSTALLED, PROPERLY MATCHING THE EXISTING GRADING OF THE ROADWAY. THE TEMPORARY PATCH SHALL BE ALLOWED TO REMAIN IN PLACE AND BE MAINTAINED FOR A PERIOD NO LONGER THAN 45 DAYS. THE COUNTY RETAINS THE RIGHT TO USE POSTED SURETY TO COMPLETE ANY RESTORATION WORK THAT HAS NOT BEEN COMPLETED IN THE 45 DAYS PERIOD. ALTERNATIVE TEMPORARY TRENCH PROTECTION (STEEL PLATES OR OTHERS) MAY BE APPROVED BY THE CONSTRUCTION COORDINATION DIVISION.
E) THE FINAL RESTORATION, THE ROAD SHALL BE MILLED/RESURFACED FOR A FULL LANE WIDTH OF THE TRAVEL LANES ENCROACHED BY THE TRENCH AREA, INCLUDING A TRANSITION AREA OF 50 FT ON EACH SIDE OF THE TRENCH, THE PAVEMENT SHALL BE MILLED AND RESURFACED PER CONSTRUCTION NOTE 6.
F) APPROVED MAGNETIC TAPE IS REQUIRED FOR ALL MAIN PRESSURE PIPES AND CONDUIT IN THE COUNTY'S RIGHT-OF-WAY. INSTALL TAPE 24" BELOW FINISHED GRADE.
G) CONTINUOUS 4" WIDE PAINT STRIPING IS REQUIRED FOR DIP/PCCP WATER MAINS (BLUE), DIP SANITARY MAINS (GREEN), DIP RECLAIMED WATER MAINS (PURPLE), GAS MAINS (YELLOW), OR AS REQUIRED BY THE APWA.

OPEN CUT PIPE INSTALLATION THOROUGHFARE ROAD 7S

I. FORCE MAINS AND GRAVITY WASTEWATER MAINS WITHIN WELLFIELD PROTECTION ZONE

PRESSURE TEST PROCEDURE TO FOLLOW THE CURRENT AWWA C-600 STANDARD (150psi, (2) HOUR DURATION).

THERE SHALL BE NO PRESSURE DROP IN THE PIPE DURING THE TEST ("ZERO" FILL-UP TOLERANCE).

II. FORCE MAINS OUTSIDE OF WELLFIELD PROTECTION ZONE

MAXIMUM QUANTITY OF WATER (GALLONS PER HOUR) THAT MAY BE SUPPLIED TO MAINTAIN PRESSURE WITHIN 5 P.S.I. OF THE SPECIFIED TEST PRESSURE

(MECHANICAL OR PUSH-ON JOINT, 18 FT. NOMINAL LENGTHS, PER 1000 FT. OF PIPE)

AVG. TEST PRESSURE	PIPE DIAMETER (INCHES)															
PSI	2	3	4	6	8	10	12	14	16	18	20	24	30	36	42	48
150	0.10	0.14	0.18	0.27	0.37	0.46	0.55	0.64	0.73	0.83	0.92	1.10	1.38	1.65	1.93	2.20

FORMULA BASIS: $L = \frac{(S) \times (D) \times (P)^{1/2}}{148,000} \times 1/2$

L = MAXIMUM QUANTITY OF WATER TO BE ADDED (GALLONS PER HOUR)
S = LENGTH OF PIPE TESTED (FEET)
D = DIAMETER OF PIPE (INCHES)
P = TEST PRESSURE (P.S.I.)

NOTES:

1. TO OBTAIN THE MAXIMUM QUANTITY OF WATER FOR PIPE WITH 20 FT. NOMINAL LENGTHS, MULTIPLY THE QUANTITY CALCULATED FROM THE TABLE BY 0.9
2. THE MAXIMUM QUANTITY OF ADDED WATER FOR A PIPELINE IS CALCULATED BY MULTIPLYING THE QUANTITY PER HOUR AS OBTAINED FROM THE ABOVE TABLE, BY THE DURATION OF THE TEST IN HOURS,AND BY THE TOTAL LENGTH OF THE LINE BEING TESTED DIVIDED BY 1,000. IF THE LINE UNDER TEST CONTAINS SECTIONS OF VARIOUS DIAMETERS, THE MAXIMUM QUANTITY ADDED WILL BE THE SUM OF THE COMPUTED QUANTITIES FOR EACH SIZE.
3. MAXIMUM TEST LENGTH = 2,500 FEET PER SECTION.
4. THIS STANDARD SHALL REFLECT ANY REVISION OF A.W.W.A. C-600. HOWEVER, THE MAXIMUM QUANTITY OF WATER ADDED SHALL NOT EXCEED 50% OF THE RECOMMENDED LIMIT PER APPLICABLE AWWA C-600 STANDARD.
5. STANDARD TEST PRESSURE = 150 P.S.I.
6. PRESSURE TEST DURATION TO BE MIN. 2 HOURS.

PRESSURE TEST CRITERIA FOR GRAVITY WASTEWATER MAIN IN WELL FIELD & FORCE MAIN 10S

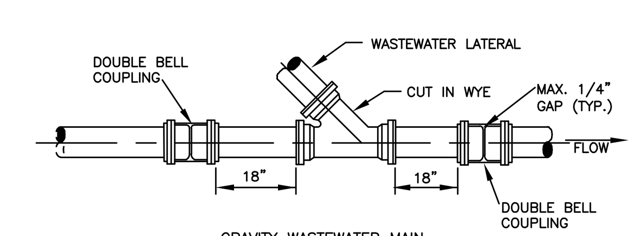

GRAVITY WASTEWATER MAIN

NOTE:

DUCTILE IRON FITTINGS (WYE, TEE, SLEEVES) ARE REQUIRED FOR DUCTILE IRON AND/OR C-900 PVC MAIN.

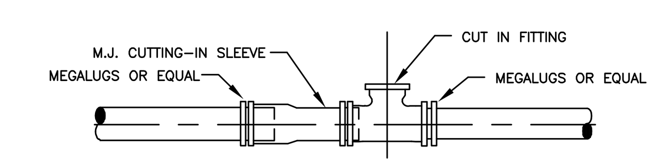

DUCTILE IRON-MECHANICAL JOINT (FORCE MAIN)

NOTE:

MEGALUGS OR EQUAL ARE REQUIRED THROUGHOUT ASSEMBLY.

WASTEWATER SYSTEM STANDARD CUT-IN DETAILS 9S

WASTEWATER #1 STANDARD DETAILS

CONSULTANT:

DESIGNED BY: WUD
DRAWN BY: M. BUCKNER
CHECKED BY: J.LAMMERT
APPROVED BY: WUD

Palm Beach County
Water Utilities Department
P.O.Box 16097
West Palm Beach, FL 33416-6097

PROJECT NO. 00-000

PROJECT NAME

PALM BEACH COUNTY FLORIDA

PALM BEACH COUNTY
WATER UTILITIES DEPARTMENT
P.O. BOX 16097
WEST PALM BEACH, FL 33416
(561)493-6000

NO.	DATE	REVISION / REMARKS	BY
	JUNE 2019	✳GENERAL REVISION	J.L.

STD DETAILS

SHEET NUMBER 0 OF 0

SEAL

Jul 30, 2019